InfoLab

IC611: Database Systems Design

Relational Design Theory

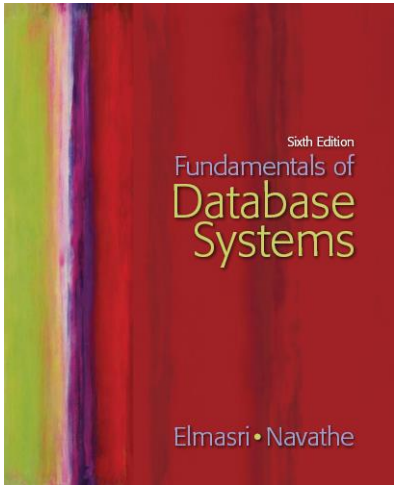

Min-Soo Kim

DGIST 대구경북과학기술원
Daegu Gyeongbuk Institute of Science & Technology

Outline

- Informal Design Guidelines for Relation Schemas
- Functional Dependencies
- Normal Forms Based on Primary Keys
- General Definitions of Second and Third Normal Forms
- Boyce-Codd Normal Form
- Multivalued Dependency and Fourth Normal Form
- Join Dependencies and Fifth Normal Form

Introduction

- **Levels at which we can discuss *goodness* of relation schemas**
  - Logical (or conceptual) level
  - Implementation (or physical storage) level
- **Approaches to database design:**
  - Bottom-up or top-down

Informal Design Guidelines for Relation Schemas

- **Measures of quality**
  - Making sure attribute semantics are clear
  - Reducing redundant information in tuples
  - Reducing NULL values in tuples
  - Disallowing possibility of generating ***spurious tuples***

Imparting Clear Semantics to Attributes in Relations

- **Semantics of a relation**
  - Meaning resulting from interpretation of attribute values in a tuple
- **Easier to explain semantics of relation**
  - Indicates better schema design

Guideline 1

- Design relation schema so that it is easy to explain its meaning
- Do not combine attributes from multiple entity types and relationship types into a single relation
- Example of violating Guideline 1: Figure 15.3

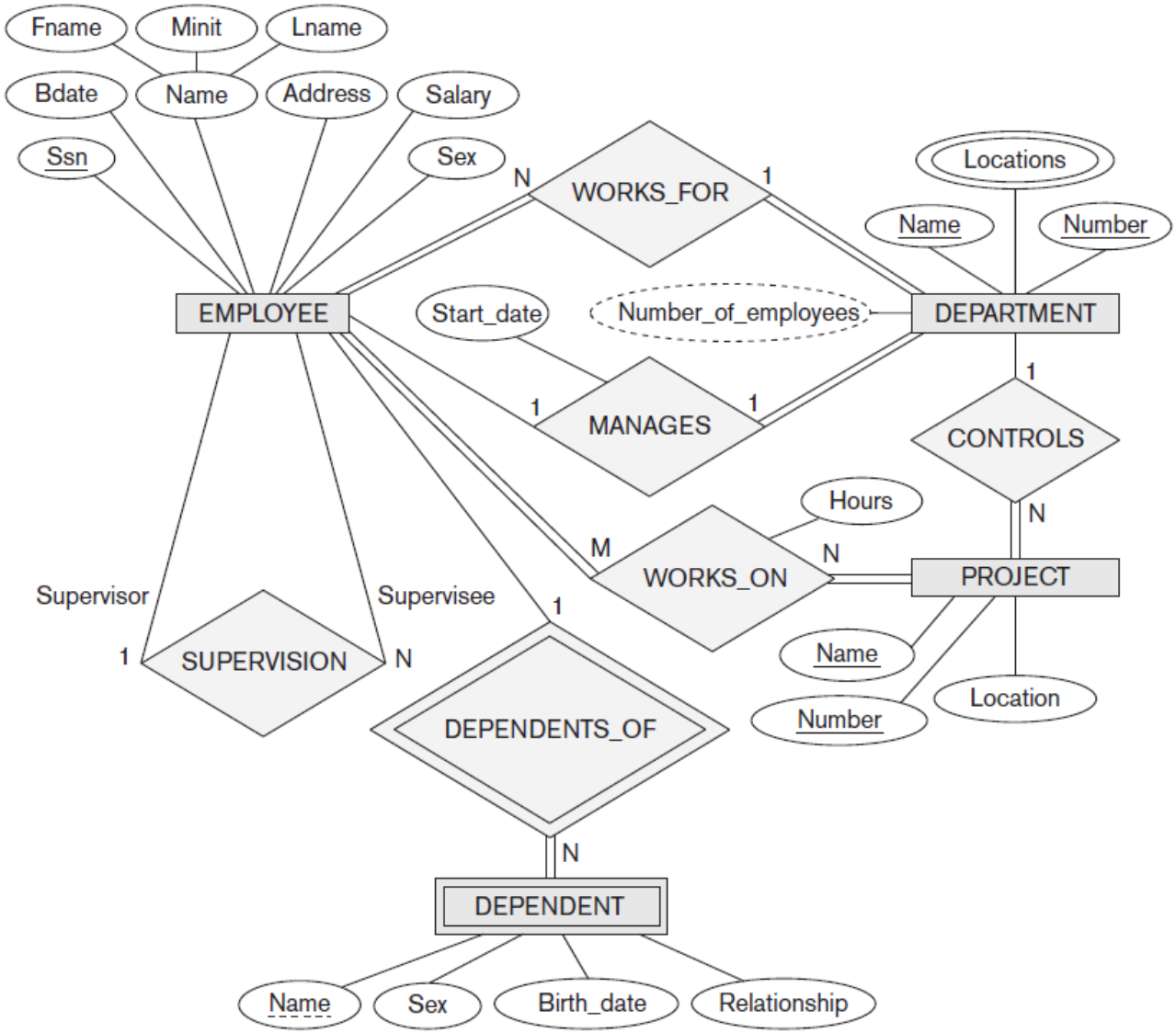

Figure 7.2
An ER schema diagram for the COMPANY database. The diagrammatic notation is introduced gradually throughout this chapter and is summarized in Figure 7.14.

EMPLOYEE

Ename	Ssn	Bdate	Address	Dnumber
	P.K.			F.K.

DEPARTMENT

Dname	Dnumber	Dmgr_ssn
	P.K.	F.K.

DEPT_LOCATIONS

Dnumber	Dlocation
F.K.	

P.K.

PROJECT

Pname	Pnumber	Plocation	Dnum
	P.K.		F.K.

WORKS_ON

Ssn	Pnumber	Hours
F.K.	F.K.	

P.K.

EMPLOYEE

Ename	Ssn	Bdate	Address	Dnumber
Smith, John B.	123456789	1965-01-09	731 Fondren, Houston, TX	5
Wong, Franklin T.	333445555	1955-12-08	638 Voss, Houston, TX	5
Zelaya, Alicia J.	999887777	1968-07-19	3321 Castle, Spring, TX	4
Wallace, Jennifer S.	987654321	1941-06-20	291Berry, Bellaire, TX	4
Narayan, Ramesh K.	666884444	1962-09-15	975 Fire Oak, Humble, TX	5
English, Joyce A.	453453453	1972-07-31	5631 Rice, Houston, TX	5
Jabbar, Ahmad V.	987987987	1969-03-29	980 Dallas, Houston, TX	4
Borg, James E.	888665555	1937-11-10	450 Stone, Houston, TX	1

DEPARTMENT

Dname	Dnumber	Dmgr_ssn
Research	5	333445555
Administration	4	987654321
Headquarters	1	888665555

DEPT_LOCATIONS

Dnumber	Dlocation
1	Houston
4	Stafford
5	Bellaire
5	Sugarland
5	Houston

WORKS_ON

Ssn	Pnumber	Hours
123456789	1	32.5
123456789	2	7.5
666884444	3	40.0
453453453	1	20.0
453453453	2	20.0
333445555	2	10.0
333445555	3	10.0
333445555	10	10.0
333445555	20	10.0
999887777	30	30.0
999887777	10	10.0
987987987	10	35.0
987987987	30	5.0
987654321	30	20.0
987654321	20	15.0
888665555	20	Null

PROJECT

Pname	Pnumber	Plocation	Dnum
ProductX	1	Bellaire	5
ProductY	2	Sugarland	5
ProductZ	3	Houston	5
Computerization	10	Stafford	4
Reorganization	20	Houston	1
Newbenefits	30	Stafford	4

Figure 15.3
Two relation schemas suffering from update anomalies. (a) EMP_DEPT and (b) EMP_PROJ.

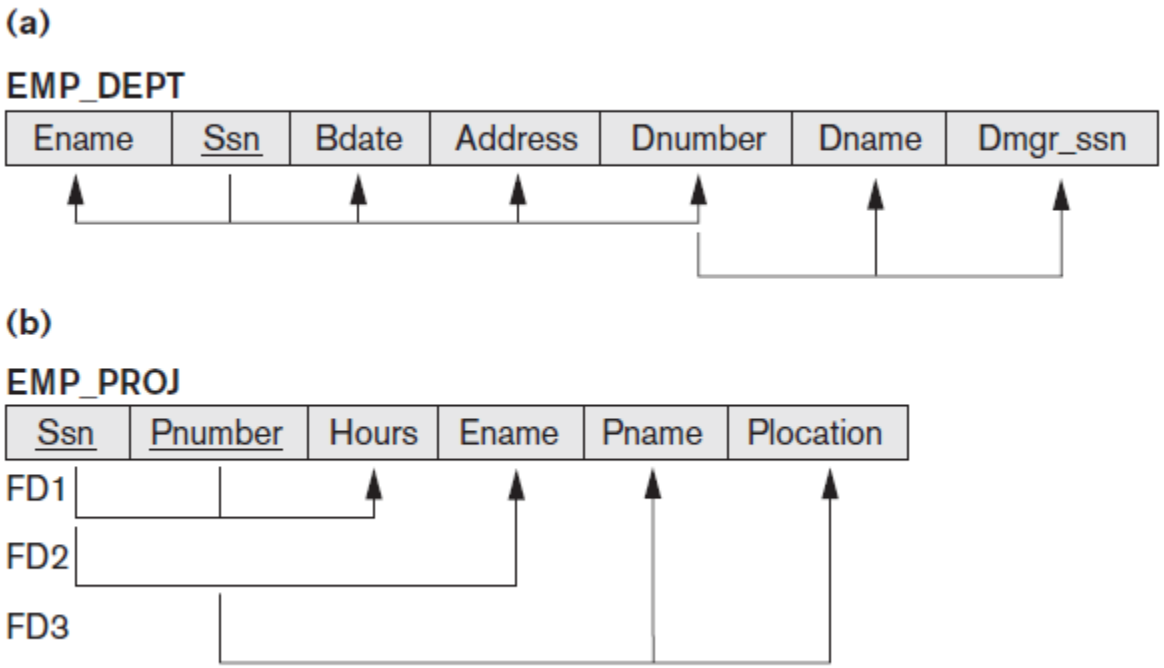

Redundant Information in Tuples and Update Anomalies

- **Grouping attributes into relation schemas**
  - Significant effect on storage space
- **Storing natural joins of base relations leads to update anomalies**
- **Types of update anomalies:**
  - Insertion
  - Deletion
  - Modification

Redundancy

EMP_DEPT

Ename	Ssn	Bdate	Address	Dnumber	Dname	Dmgr_ssn
Smith, John B.	123456789	1965-01-09	731 Fondren, Houston, TX	5	Research	333445555
Wong, Franklin T.	333445555	1955-12-08	638 Voss, Houston, TX	5	Research	333445555
Zelaya, Alicia J.	999887777	1968-07-19	3321 Castle, Spring, TX	4	Administration	987654321
Wallace, Jennifer S.	987654321	1941-06-20	291 Berry, Bellaire, TX	4	Administration	987654321
Narayan, Ramesh K.	666884444	1962-09-15	975 FireOak, Humble, TX	5	Research	333445555
English, Joyce A.	453453453	1972-07-31	5631 Rice, Houston, TX	5	Research	333445555
Jabbar, Ahmad V.	987987987	1969-03-29	980 Dallas, Houston, TX	4	Administration	987654321
Borg, James E.	888665555	1937-11-10	450 Stone, Houston, TX	1	Headquarters	888665555

Redundancy Redundancy

EMP_PROJ

Ssn	Pnumber	Hours	Ename	Pname	Plocation
123456789	1	32.5	Smith, John B.	ProductX	Bellaire
123456789	2	7.5	Smith, John B.	ProductY	Sugarland
666884444	3	40.0	Narayan, Ramesh K.	ProductZ	Houston
453453453	1	20.0	English, Joyce A.	ProductX	Bellaire
453453453	2	20.0	English, Joyce A.	ProductY	Sugarland
333445555	2	10.0	Wong, Franklin T.	ProductY	Sugarland
333445555	3	10.0	Wong, Franklin T.	ProductZ	Houston
333445555	10	10.0	Wong, Franklin T.	Computerization	Stafford
333445555	20	10.0	Wong, Franklin T.	Reorganization	Houston
999887777	30	30.0	Zelaya, Alicia J.	Newbenefits	Stafford
999887777	10	10.0	Zelaya, Alicia J.	Computerization	Stafford
987987987	10	35.0	Jabbar, Ahmad V.	Computerization	Stafford
987987987	30	5.0	Jabbar, Ahmad V.	Newbenefits	Stafford
987654321	30	20.0	Wallace, Jennifer S.	Newbenefits	Stafford
987654321	20	15.0	Wallace, Jennifer S.	Reorganization	Houston
888665555	20	Null	Borg, James E.	Reorganization	Houston

Guideline 2

- **Design base relation schemas so that no update anomalies are present in the relations**
- **If any anomalies are present:**
  - Note them clearly
  - Make sure that the programs that update the database will operate correctly

NULL Values in Tuples

- **May group many attributes together into a "fat" relation**
  - Can end up with many NULLs
  - e.g., Visa_status for the U.S. Students relation (not applicable)
  - e.g., Date_of_birth for the employee relation (unknown)

- **Problems with NULLs**
  - Wasted storage space
  - Problems understanding meaning
    - outer join
    - aggregate operations (e.g., COUTN, SUM)
    - comparison

Guideline 3

- **Avoid placing attributes in a base relation whose values may frequently be NULL**

- **If NULLs are unavoidable:**
  - Make sure that they apply in exceptional cases only, not to a majority of tuples

Generation of Spurious Tuples

- **Figure 15.5(a)**
  - Relation schemas EMP_LOCS and EMP_PROJ1
- **NATURAL JOIN**
  - Result produces many more tuples than the original set of tuples in EMP_PROJ
  - Called **spurious tuples**
  - Represent spurious information that is not valid

Redundancy

EMP_DEPT

Ename	Ssn	Bdate	Address	Dnumber	Dname	Dmgr_ssn
Smith, John B.	123456789	1965-01-09	731 Fondren, Houston, TX	5	Research	333445555
Wong, Franklin T.	333445555	1955-12-08	638 Voss, Houston, TX	5	Research	333445555
Zelaya, Alicia J.	999887777	1968-07-19	3321 Castle, Spring, TX	4	Administration	987654321
Wallace, Jennifer S.	987654321	1941-06-20	291 Berry, Bellaire, TX	4	Administration	987654321
Narayan, Ramesh K.	666884444	1962-09-15	975 FireOak, Humble, TX	5	Research	333445555
English, Joyce A.	453453453	1972-07-31	5631 Rice, Houston, TX	5	Research	333445555
Jabbar, Ahmad V.	987987987	1969-03-29	980 Dallas, Houston, TX	4	Administration	987654321
Borg, James E.	888665555	1937-11-10	450 Stone, Houston, TX	1	Headquarters	888665555

Redundancy Redundancy

EMP_PROJ

Ssn	Pnumber	Hours	Ename	Pname	Plocation
123456789	1	32.5	Smith, John B.	ProductX	Bellaire
123456789	2	7.5	Smith, John B.	ProductY	Sugarland
666884444	3	40.0	Narayan, Ramesh K.	ProductZ	Houston
453453453	1	20.0	English, Joyce A.	ProductX	Bellaire
453453453	2	20.0	English, Joyce A.	ProductY	Sugarland
333445555	2	10.0	Wong, Franklin T.	ProductY	Sugarland
333445555	3	10.0	Wong, Franklin T.	ProductZ	Houston
333445555	10	10.0	Wong, Franklin T.	Computerization	Stafford
333445555	20	10.0	Wong, Franklin T.	Reorganization	Houston
999887777	30	30.0	Zelaya, Alicia J.	Newbenefits	Stafford
999887777	10	10.0	Zelaya, Alicia J.	Computerization	Stafford
987987987	10	35.0	Jabbar, Ahmad V.	Computerization	Stafford
987987987	30	5.0	Jabbar, Ahmad V.	Newbenefits	Stafford
987654321	30	20.0	Wallace, Jennifer S.	Newbenefits	Stafford
987654321	20	15.0	Wallace, Jennifer S.	Reorganization	Houston
888665555	20	Null	Borg, James E.	Reorganization	Houston

(a)

EMP_LOCS

Ename	Plocation

P.K.

EMP_PROJ1

Ssn	Pnumber	Hours	Pname	Plocation

P.K.

Figure 15.5
Particularly poor design for the EMP_PROJ relation in Figure 15.3(b). (a) The two relation schemas EMP_LOCS and EMP_PROJ1. (b) The result of projecting the extension of EMP_PROJ from Figure 15.4 onto the relations EMP_LOCS and EMP_PROJ1.

(b)

EMP_LOCS

Ename	Plocation
Smith, John B.	Bellaire
Smith, John B.	Sugarland
Narayan, Ramesh K.	Houston
English, Joyce A.	Bellaire
English, Joyce A.	Sugarland
Wong, Franklin T.	Sugarland
Wong, Franklin T.	Houston
Wong, Franklin T.	Stafford
Zelaya, Alicia J.	Stafford
Jabbar, Ahmad V.	Stafford
Wallace, Jennifer S.	Stafford
Wallace, Jennifer S.	Houston
Borg, James E.	Houston

EMP_PROJ1

Ssn	Pnumber	Hours	Pname	Plocation
123456789	1	32.5	ProductX	Bellaire
123456789	2	7.5	ProductY	Sugarland
666884444	3	40.0	ProductZ	Houston
453453453	1	20.0	ProductX	Bellaire
453453453	2	20.0	ProductY	Sugarland
333445555	2	10.0	ProductY	Sugarland
333445555	3	10.0	ProductZ	Houston
333445555	10	10.0	Computerization	Stafford
333445555	20	10.0	Reorganization	Houston
999887777	30	30.0	Newbenefits	Stafford
999887777	10	10.0	Computerization	Stafford
987987987	10	35.0	Computerization	Stafford
987987987	30	5.0	Newbenefits	Stafford
987654321	30	20.0	Newbenefits	Stafford
987654321	20	15.0	Reorganization	Houston
888665555	20	NULL	Reorganization	Houston

	Ssn	Pnumber	Hours	Pname	Plocation	Ename
	123456789	1	32.5	ProductX	Bellaire	Smith, John B.
*	123456789	1	32.5	ProductX	Bellaire	English, Joyce A.
	123456789	2	7.5	ProductY	Sugarland	Smith, John B.
*	123456789	2	7.5	ProductY	Sugarland	English, Joyce A.
*	123456789	2	7.5	ProductY	Sugarland	Wong, Franklin T.
	666884444	3	40.0	ProductZ	Houston	Narayan, Ramesh K.
*	666884444	3	40.0	ProductZ	Houston	Wong, Franklin T.
*	453453453	1	20.0	ProductX	Bellaire	Smith, John B.
	453453453	1	20.0	ProductX	Bellaire	English, Joyce A.
*	453453453	2	20.0	ProductY	Sugarland	Smith, John B.
	453453453	2	20.0	ProductY	Sugarland	English, Joyce A.
*	453453453	2	20.0	ProductY	Sugarland	Wong, Franklin T.
*	333445555	2	10.0	ProductY	Sugarland	Smith, John B.
*	333445555	2	10.0	ProductY	Sugarland	English, Joyce A.
	333445555	2	10.0	ProductY	Sugarland	Wong, Franklin T.
*	333445555	3	10.0	ProductZ	Houston	Narayan, Ramesh K.
	333445555	3	10.0	ProductZ	Houston	Wong, Franklin T.
	333445555	10	10.0	Computerization	Stafford	Wong, Franklin T.
*	333445555	20	10.0	Reorganization	Houston	Narayan, Ramesh K.
	333445555	20	10.0	Reorganization	Houston	Wong, Franklin T.

*
*
*

Guideline 4

- **Design relation schemas to be joined with equality conditions on attributes that are appropriately related**
  - Guarantees that no spurious tuples are generated
- **Avoid relations that contain matching attributes that are not (foreign key, primary key) combinations**

Atom vs. Relation

- c.f., cartesian product vs. natural join

Summary and Discussion of Design Guidelines

- Anomalies cause redundant work to be done
- Waste of storage space due to NULLs
- Difficulty of performing operations and joins due to NULL values
- Generation of invalid and spurious data during joins

Functional Dependencies

- Formal tool for analysis of relational schemas
- Enables us to detect and describe some of the above-mentioned problems in precise terms
- Theory of functional dependency

Definition of Functional Dependency

- **Constraint between two sets of attributes from the database**

> **Definition.** A **functional dependency**, denoted by $X \rightarrow Y$, between two sets of attributes X and Y that are subsets of R specifies a *constraint* on the possible tuples that can form a relation state r of R. The constraint is that, for any two tuples t_1 and t_2 in r that have $t_1[X] = t_2[X]$, they must also have $t_1[Y] = t_2[Y]$.

- **Property of semantics or meaning of the attributes**
- **Legal relation states**
  - Satisfy the functional dependency constraints

Definition of Functional Dependency (cont'd.)

- Given a populated relation
  - Cannot determine which FDs hold and which do not
  - Unless meaning of and relationships among attributes known
  - Can state that FD does not hold if there are tuples that show violation of such an FD

TEACH

Teacher	Course	Text
Smith	Data Structures	Bartram
Smith	Data Management	Martin
Hall	Compilers	Hoffman
Brown	Data Structures	Horowitz

Figure 15.7
A relation state of TEACH with a *possible* functional dependency TEXT → COURSE. However, TEACHER → COURSE is ruled out.

Normal Forms Based on Primary Keys

- **Normalization process**
- **Approaches for relational schema design**
  - Perform a conceptual schema design using a conceptual model then map conceptual design into a set of relations
  - Design relations based on external knowledge derived from existing implementation of files or forms or reports

Normalization of Relations

- **Takes a relation schema through a series of tests**
  - Certify whether it satisfies a certain normal form
  - Proceeds in a top-down fashion
- **Normal form tests**

Definition. The **normal form** of a relation refers to the highest normal form condition that it meets, and hence indicates the degree to which it has been normalized.

Normalization of Relations (cont'd.)

- **Properties that the relational schemas should have:**
  - ***Nonadditive join property***
    - Spurious tuple generation problem does not occur
    - Extremely critical
  - ***Dependency preservation property***
    - Each functional dependency is represented in result relations
    - Desirable but sometimes sacrificed for other factors

Practical Use of Normal Forms

- **Normalization carried out in practice**
  - Resulting designs are of high quality and meet the desirable properties stated previously
  - Pays particular attention to normalization only up to 3NF, BCNF, or at most 4NF
- **Do not need to normalize to the highest possible normal form**

Definition. Denormalization is the process of storing the join of higher normal form relations as a base relation, which is in a lower normal form.

Deep learning, Data Mining, and Denormalization

Definitions of Keys and Attributes Participating in Keys

- **Definition of superkey and key**
- **Candidate key**
  - If more than one key in a relation schema
    - One is **primary key**
    - Others are **secondary keys**

Definition. An attribute of relation schema R is called a **prime attribute** of R if it is a member of *some candidate key* of R. An attribute is called **nonprime** if it is not a prime attribute—that is, if it is not a member of any candidate key.

First Normal Form

- **Part of the formal definition of a relation in the basic (flat) relational model**
- **Only attribute values permitted are single atomic (or indivisible) values**
- **Techniques to achieve first normal form**
  - Remove attribute and place in separate relation
  - Expand the key
  - Use several atomic attributes

First Normal Form (cont'd.)

- **Does not allow nested relations**
  - Each tuple can have a relation within it
- **To change to 1NF:**
  - Remove nested relation attributes into a new relation
  - Propagate the primary key into it
  - **Unnest** relation into a set of 1NF relations

(a)

DEPARTMENT

Dname	Dnumber	Dmgr_ssn	Dlocations

(b)

DEPARTMENT

Dname	Dnumber	Dmgr_ssn	Dlocations
Research	5	333445555	{Bellaire, Sugarland, Houston}
Administration	4	987654321	{Stafford}
Headquarters	1	888665555	{Houston}

(c)

DEPARTMENT

Dname	Dnumber	Dmgr_ssn	Dlocation
Research	5	333445555	Bellaire
Research	5	333445555	Sugarland
Research	5	333445555	Houston
Administration	4	987654321	Stafford
Headquarters	1	888665555	Houston

Figure 15.9
Normalization into 1NF. (a) A relation schema that is not in 1NF. (b) Sample state of relation DEPARTMENT. (c) 1NF version of the same relation with redundancy.

Nested relations in each tuple

- c.f., set of set in programming languages

Second Normal Form

- **Based on concept of full functional dependency**
  - Versus **partial dependency**

Definition. A relation schema R is in 2NF if every nonprime attribute A in R is *fully functionally dependent* on the primary key of R.

- **Second normalize into a number of 2NF relations**
  - Nonprime attributes are associated only with part of primary key on which they are fully functionally dependent

Third Normal Form

- **Based on concept of transitive dependency**

Definition. According to Codd's original definition, a relation schema R is in 3NF if it satisfies 2NF *and* no nonprime attribute of R is transitively dependent on the primary key.

- **Problematic FD**
  - Left-hand side is part of primary key
  - Left-hand side is a nonkey attribute

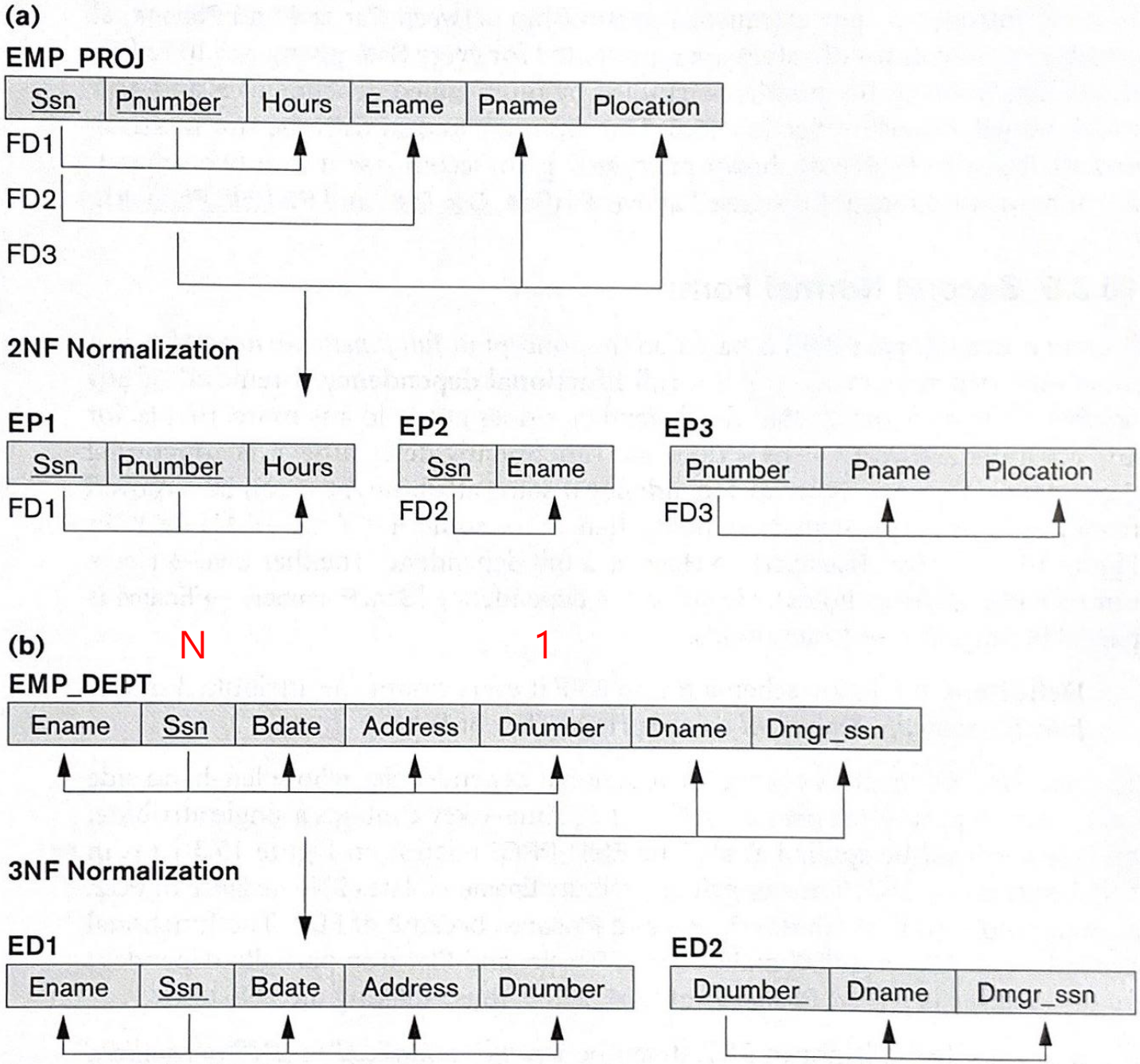

General Definitions of Second and Third Normal Forms

- **Prime attribute**
  - Part of any candidate key will be considered as prime
- **Consider partial, full functional, and transitive dependencies with respect to all candidate keys of a relation**

General Definition of Second Normal Form

Definition. A relation schema R is in **second normal form** (2NF) if every non-prime attribute A in R is not partially dependent on *any* key of R.[11]

Figure 15.12
Normalization into 2NF and 3NF. (a) The LOTS relation with its functional dependencies FD1 through FD4. (b) Decomposing into the 2NF relations LOTS1 and LOTS2. (c) Decomposing LOTS1 into the 3NF relations LOTS1A and LOTS1B. (d) Summary of the progressive normalization of LOTS.

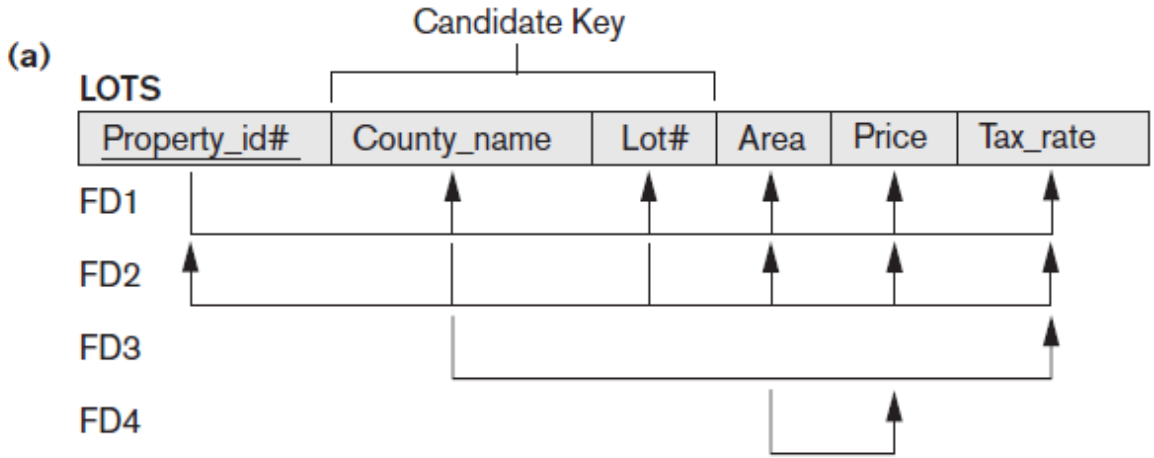

(b)

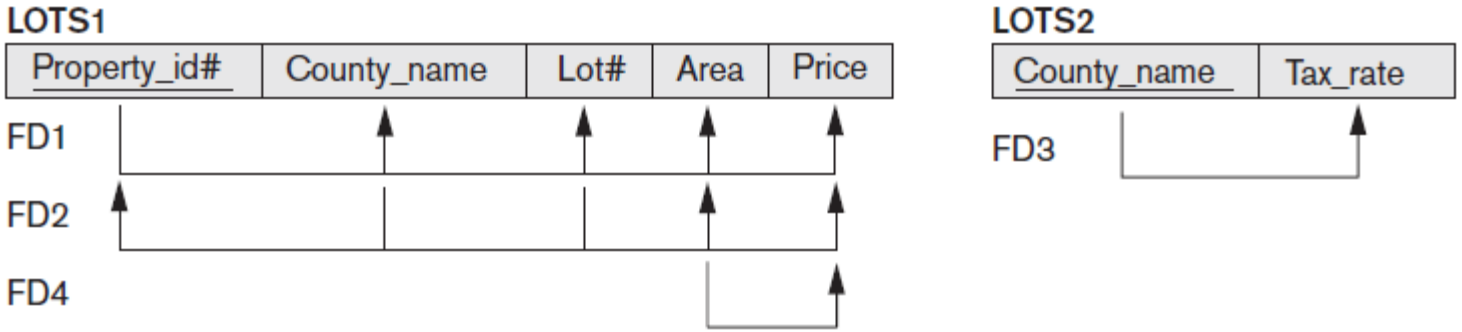
LOTS1
Property_id#
County_name
Lot#
Area
Price
FD1
FD2
FD4
LOTS2
County_name
Tax_rate
FD3

(c)

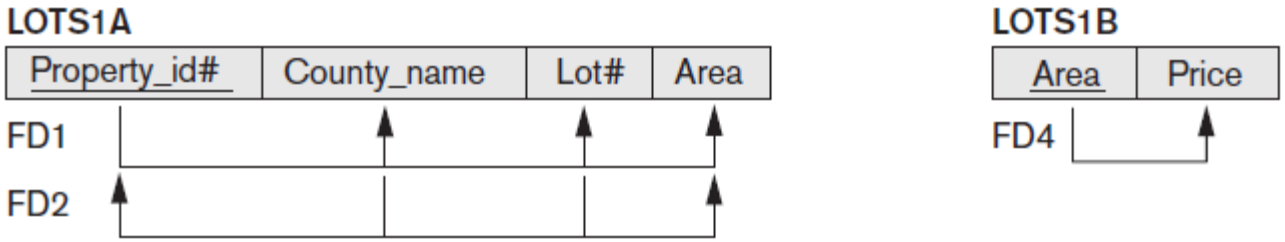
LOTS1A
Property_id#
County_name
Lot#
Area
FD1
FD2
LOTS1B
Area
Price
FD4

(d)

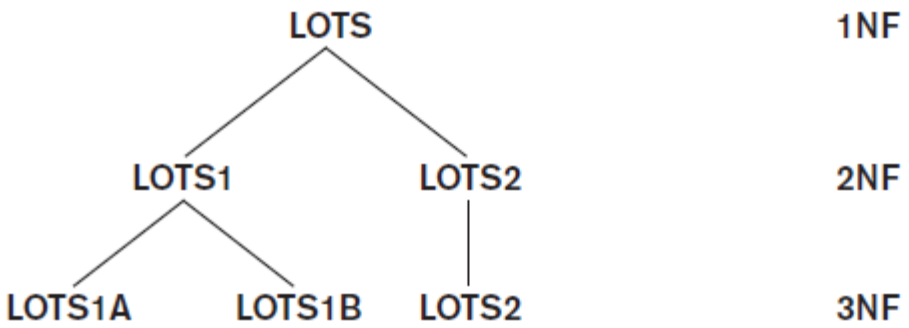
LOTS
1NF
LOTS1
LOTS2
2NF
LOTS1A
LOTS1B
LOTS2
3NF

General Definition of Third Normal Form

Definition. A relation schema R is in **third normal form** (3NF) if, whenever a *nontrivial* functional dependency $X \rightarrow A$ holds in R, either (a) X is a superkey of R, or (b) A is a prime attribute of R.

Alternative Definition. A relation schema R is in 3NF if every nonprime attribute of R meets both of the following conditions:

- It is fully functionally dependent on every key of R.
- It is nontransitively dependent on every key of R.

Table 15.1 Summary of Normal Forms Based on Primary Keys and Corresponding Normalization

Normal Form	Test	Remedy (Normalization)
First (1NF)	Relation should have no multivalued attributes or nested relations.	Form new relations for each multivalued attribute or nested relation.
Second (2NF)	For relations where primary key contains multiple attributes, no nonkey attribute should be functionally dependent on a part of the primary key.	Decompose and set up a new relation for each partial key with its dependent attribute(s). Make sure to keep a relation with the original primary key and any attributes that are fully functionally dependent on it.
Third (3NF)	Relation should not have a nonkey attribute functionally determined by another nonkey attribute (or by a set of nonkey attributes). That is, there should be no transitive dependency of a nonkey attribute on the primary key.	Decompose and set up a relation that includes the nonkey attribute(s) that functionally determine(s) other nonkey attribute(s).

Boyce-Codd Normal Form

- **Every relation in BCNF is also in 3NF**
  - Relation in 3NF is not necessarily in BCNF

Definition. A relation schema R is in **BCNF** if whenever a *nontrivial* functional dependency $X \rightarrow A$ holds in R, then X is a superkey of R.

- **Difference:**
  - Condition which allows A to be prime is absent from BCNF
- **Most relation schemas that are in 3NF are also in BCNF**

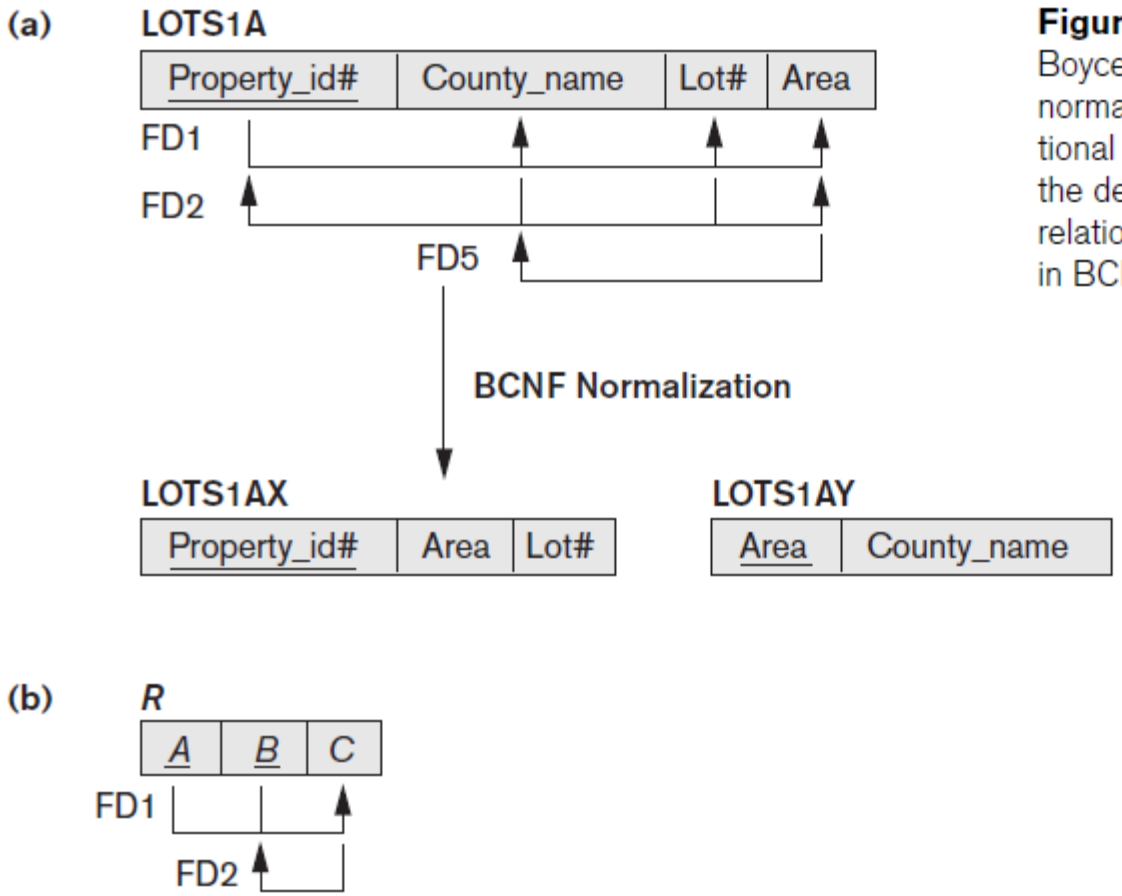

Figure 15.13
Boyce-Codd normal form. (a) BCNF normalization of LOTS1A with the functional dependency FD2 being lost in the decomposition. (b) A schematic relation with FDs; it is in 3NF, but not in BCNF.

Multivalued Dependency and Fourth Normal Form

- **Multivalued dependency (MVD)**
  - Consequence of first normal form (1NF)

Definition. A multivalued dependency $X \twoheadrightarrow Y$ specified on relation schema R, where X and Y are both subsets of R, specifies the following constraint on any relation state r of R: If two tuples t_1 and t_2 exist in r such that $t_1[X] = t_2[X]$, then two tuples t_3 and t_4 should also exist in r with the following properties,[15] where we use Z to denote $(R - (X \cup Y))$:[16]

- $t_3[X] = t_4[X] = t_1[X] = t_2[X]$.
- $t_3[Y] = t_1[Y]$ and $t_4[Y] = t_2[Y]$.
- $t_3[Z] = t_2[Z]$ and $t_4[Z] = t_1[Z]$.

MultiValued Dependency (MVD)

Definition [Ull1988]

Suppose we are given a relation schema R, and X and Y are subsets of R. X→→Y holds in R if whenever *r* is a relation for R, and μ and ν are two tuples in *r*, with μ[X] = ν[X] (that is, μ and ν agree on the attributes of X), then *r* also contains tuples ϕ and ψ, where

1. ϕ [X] = ψ [X] = μ [X] = ν [X]
2. ϕ [Y] = μ [Y] and ϕ [R-X-Y] = ν [R-X-Y]
3. ψ [Y] = ν [Y] and ψ [R-X-Y] = μ [R-X-Y]

Non-trivial MVD: Y ⊄ X and X ∪ Y ≠ R

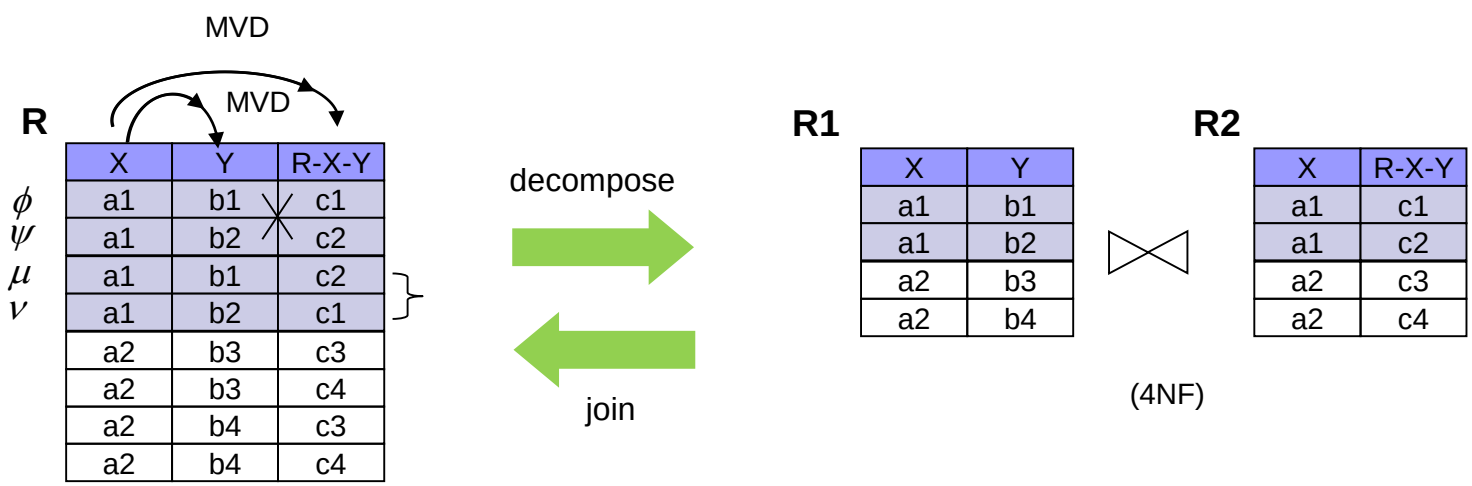

Multivalued Dependency and Fourth Normal Form (cont'd.)

- **Relations containing nontrivial MVDs**
  - **All-key relations**
- **Fourth normal form (4NF)**
  - Violated when a relation has undesirable multivalued dependencies

Definition. A relation schema R is in 4NF with respect to a set of dependencies F (that includes functional dependencies and multivalued dependencies) if, for every *nontrivial* multivalued dependency $X \twoheadrightarrow Y$ in F^{+17} X is a superkey for R.

Join Dependencies and Fifth Normal Form

- **Join dependency**
- **Multiway decomposition into fifth normal form (5NF)**
- **Very peculiar semantic constraint**
  - Normalization into 5NF is very rarely done in practice

Join Dependencies and Fifth Normal Form (cont'd.)

Definition. A **join dependency** (**JD**), denoted by JD($R_1, R_2, \ldots, R_n$), specified on relation schema R, specifies a constraint on the states r of R. The constraint states that every legal state r of R should have a nonadditive join decomposition into $R_1, R_2, \ldots, R_n$. Hence, for every such r we have

$$* (\pi_{R_1}(r), \pi_{R_2}(r), \ldots, \pi_{R_n}(r)) = r$$

Definition. A relation schema R is in **fifth normal form** (**5NF**) (or **project-join normal form** (**PJNF**)) with respect to a set F of functional, multivalued, and join dependencies if, for every nontrivial join dependency JD($R_1, R_2, \ldots, R_n$) in F^+ (that is, implied by F),[18] every R_i is a superkey of R.

Summary

- **Informal guidelines for good design**
- **Functional dependency**
  - Basic tool for analyzing relational schemas
- **Normalization:**
  - 1NF, 2NF, 3NF, BCNF, 4NF, 5NF